PALMER

Aluminum Case Pressure Chart Recorders

Palmer Aluminum Case Pressure Chart Recorders provide proven reliability for accurate measurement and recording of pressure in many applications. Since 1962 we have manufactured and supplied recorders for industry in the U.S. and around the world. Palmer Recorders are designed for indoor or outdoor use, and provide long service life, even in harsh conditions. Many of our Recorders are still in service after 50 years!

Each Recorder is custom made to order, enabling you to specify the options necessary for your requirements.

Palmer Recorders are available in 8" or 12" models in heavy die cast aluminum and come complete with a battery operated chart drive and up to three (3) felt tip pens. Spring Wound chart drives are also available. Case mounting styles are Wall, Flush, Pedestal, Pipestand or Portable. The many combinations of case mounts and internals we offer allow selections which will meet your specific requirements without limiting performance or demanding a custom price.

Aluminum Case Features

- The heavy-duty die cast aluminum case has a corrosion resistant under coat and a top White Gloss Powder Coat for a long lasting corrosion resistant finish, even in extreme environments. Black Matte Powder Coat or Gray Gloss Powder Coat are available.
- The case is heat treated to prevent distortion or warping. Doors and windows are weather tight, and can be selected as solid or with a glass or plexiglass window. Shatter-proof glass is also available.
- Doors close with a draw pull latch with hasp. Flush Mount case closes with a black lever handle. Double cam latch bar with padlock type handle is available as an option on a solid door.
- Temperature and/or pressure connections are located at the back, top, or bottom of case, depending on mounting style or your specific requirements.
- Pressure Recorders have 1/2" diameter air vent holes in case. All internal components are corrosion resistant.

Aluminum Case Styles

Wall Mount - Supplied with pressure connection at the bottom of case unless otherwise specified.

Flush Mount - Supplied with pressure connection at the back of the case. Black lever handle standard.

Pipestand Mount - Supplied with pressure connection at the bottom of case unless otherwise specified.

Portable - Supplied with pressure connection at the back of the case unless otherwise specified.

Pedestal Mount - Supplied with pressure connection at the back of the case unless otherwise specified.

Case Dimensions: (Exterior box only, depending on case style)
8 inch Case - 10-9/16" Wide x 13-5/8" High x 4-7/8" Deep (268.3 x 346.0 x 123.8 mm).
12 inch Case - 13-1/16" Wide x 15-13/16" High x 4-7/8" Deep (331.8 x 401.6 x 123.8 mm).

Case Weight: (Empty box only, depending on mounting style)
8 inch Case - 12 lbs (5.44 kg). 12 inch Case - 16 lbs (7.25 kg).

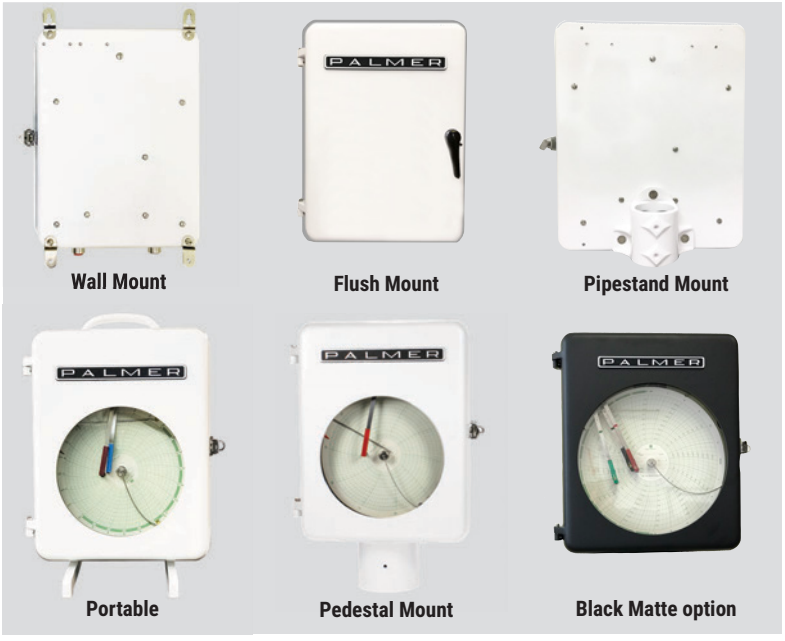

MADE IN THE USA
MNC Manufactured in North Carolina
ISO 9001:2015 CERTIFIED QUALITY MANAGEMENT SYSTEM
THREE YEAR 3 WARRANTY
CALIBRATION TRACEABLE TO NIST
IP55 COMPLIANT

Specifications subject to change without notice. Go to www.palmerwahl.com for most current information.

Chart Drives - Flexibility for the Field

Battery Operated Quartz Multi-Speed Chart Drives (BOCD) offer complete flexibility for recording - even in the most demanding applications

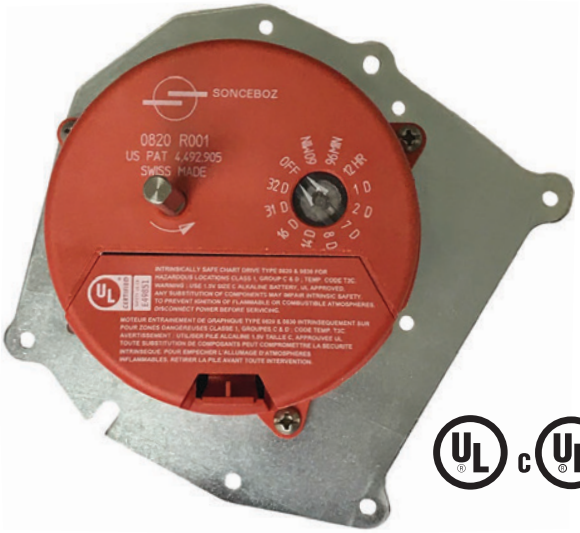

Designed for outdoor use, hermetically sealed Chart Drives for Palmer Recorders have a broad operating temperature range of -40°F to 160°F and operate reliably even in wet or dirty environments. Freezer tested to -40°F, they will withstand extreme temperatures below 10°F when used with a "C" size 3.6V Lithium Thionyl Chloride Battery. The highly adaptable design will fit any chart recorder, and makes exchange in the field a snap.

The multi-speed dial on the front of the case allows field selectable recording intervals from 30 minutes (PC-12) to 32 days (PC-11) and 96 days (PC-18). The dial also turns the unit off to conserve battery power (PC-11/18 models). A pulsating LED indicator behind the dial shows that the battery is charged and that the unit is operating.

Our PC-11, PC-12 and PC-18 are rated Intrinsically Safe, making them ideal for use by gas utility companies and in other situations where hazardous or combustible materials are present.

BOCD Chart Drive Features

- **PC-11 -** 11 Speeds: switch selectable, choose from 60 min., 96 min., 12 hr., 24 hr., 48 hr., 7 day, 8 day, 14 day, 16 day, 31 day or 32 day recording intervals and OFF.
- **PC-12 -** 12 Speeds: switch selectable, choose from 30 min., 60 min., 2 hr., 4 hr., 6 hr., 8 hr., 12 hr., 24 hr., 48 hr., 3 day, 4 day, or 7 day recording intervals. No OFF.
- **PC-18 -** 12 Speeds: switch selectable, choose from 60 min., 96 min., 12 hr., 1 day, 7 day, 8 day, 14 day, 16 day, 31 day, 32 day, or 96 day recording intervals and OFF.
- Universal Mounting Bracket: fits all chart recorders for easy replacement.
- .25" Drive Shaft with flat: accepts different drive hubs.
- High Torque: 25 oz/in torque increases life and improves accuracy.
- No Axial or Angular Backlash: charts don't shift.
- Battery: 1.5 volt "C" alkaline battery (not included). For temperatures below 10°F use with a "C" size 3.6V Lithium Thionyl Chloride Battery.
- Molded Body Pilot: Permits field exchange without recalibration.
- Maintenance-Free: Closed construction case protects all moving parts.
- Separate Battery Compartment: prevents drive damage from corrosion.
- UL Listed: Class I, Groups C and D; CUL Listed; Intrinsically Safe.

Spring Wound Chart Drive

Switchable Dual Speed Clock. - By use of a shift lever, the drive can be set for 24 hour or 7 day rotation. Rotation is set at factory to conform to your specifications. Verify that the drive is set properly. To wind the drive, remove chart and use the key furnished with the recorder.
Standard Rotation: 24 hour / 7 day

Available clock rotations FOR ALL CLOCKS: Select one for Factory Setting

Code	Rotation Options	PC-11	PC-12	PC-18	Spring Wound
A	15 Min				Special Order
B	30 Min		✓		
C	60 Min / 1 Hour	✓	✓	✓	Special Order
D	96 Min	✓		✓	Special Order
E	2 Hour		✓		Special Order
X	3 Hour				Special Order
F	4 Hour		✓		Special Order
G	6 Hour		✓		
H	8 Hour		✓		Special Order
J	12 Hour	✓	✓	✓	
K	24 Hour / 1 Day	✓	✓	✓	✓
L	48 Hour / 2 Day	✓	✓		
M	3 Day		✓		
N	4 Day		✓		
P	7 Day	✓	✓	✓	✓
R	8 Day	✓		✓	
S	14 Day	✓		✓	
T	16 Day	✓		✓	
U	31 Day	✓		✓	
V	32 Day	✓		✓	
W	96 Day			✓	

Specifications subject to change without notice. Go to www.palmerwahl.com for most current information.

Palmer Pressure Elements and Ranges

Pressure Elements

Each Palmer Pressure Element is individually designed and calibrated for each selected pressure range span. Palmer subjects these elements to extensive testing during calibration to ensure better than specified accuracy. The all-welded system prevents deterioration.

- Accuracy: ± 1/2 chart graduation.
  Optional: ± 1/4 chart graduation - available on the Top Pen only, for ranges over 30 to 10,000 PSI only (using the Standard Pressure Element only). (Factory setting only). Not available on DP Recorder.
- Angular deflection of the pen arm of 22.5° for 8" Case and 36° for 12" Case.
- Standard pressure ranges are available in pounds per square inch, bar, inches of water, inches of mercury, kilo pascals, and ounces per square inch.
- The all welded construction on the Standard Pressure Element offers over-range protection for ranges over 30 PSI to 10,000 PSI (with 1/4" NPT female connection).
- Ranges 10,000 PSI and under come standard with 1/4" NPT female connection. 10,000 PSI may choose an optional Autoclave fitting. Ranges above 10,000 require a 9/16"-18 UNF high pressure female Autoclave style fitting. (Also requires user supplied tubing assembly).
- Precalibrated pressure elements for field replacement are also available.

Low Pressure Element: 316 Stainless Steel bellows diaphragm, tubing and fittings for ranges 30 PSI and below with 1/4" NPT.

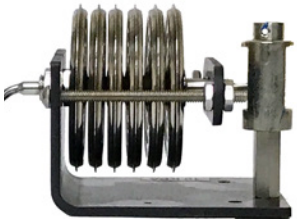

Standard Pressure Element: 316 Stainless Steel helical coil bourdon tube with Stainless Steel Fittings and tubing for ranges over 30 to 10,000 PSI, with 1/4" NPT.

High Pressure Element: 316 Stainless Steel helical coil bourdon tube for ranges 10,000 PSI, 15,000, 20,000 and 30,000 PSI with autoclave fitting (with calibration on rise only for 15,000 and above.)

Pressure Ranges

Pressure Ranges							
PSI Ranges			Hg Ranges	kPa Ranges	in H_2O Ranges	Bar Ranges	
0 to 1 PSI	0 to 75 PSI*	0 to 1,500 PSI	0 to 10 Hg*	0 to 5 kPa*	0 to 10 in H_2O	0 to 6 Bar*	0 to 250 Bar
0 to 3 PSI	0 to 100 PSI*	0 to 2,000 PSI	0 to 30 Hg*	0 to 20 kPa*	0 to 15 in H_2O	0 to 10 Bar*	0 to 300 Bar
0 to 5 PSI*	0 to 120 PSI*	0 to 2,500 PSI	0 to 50 Hg*	0 to 80 kPa*	0 to 20 in H_2O	0 to 16 Bar*	0 to 400 Bar
0 to 6 PSI*	0 to 150 PSI*	0 to 3,000 PSI	**oz/in2 Ranges**	0 to 100 kPa*	0 to 25 in H_2O	0 to 25 Bar	0 to 500 Bar
0 to 8 PSI*	0 to 200 PSI*	0 to 4,000 PSI	0 to 10 oz/in2*	0 to 500 kPa*	0 to 30 in H_2O	0 to 40 Bar	0 to 600 Bar
0 to 10 PSI*	0 to 250 PSI*	0 to 5,000 PSI	0 to 15 oz/in2*	0 to 800 kPa*	0 to 40 in H_2O	0 to 50 Bar	0 to 1,000 Bar
0 to 15 PSI*	0 to 300 PSI*	0 to 6,000 PSI	0 to 20 oz/in2*	0 to 1,000 kPa*	0 to 50 in H_2O	0 to 60 Bar	0 to 1,200 Bar
0 to 20 PSI*	0 to 350 PSI	0 to 8,000 PSI	0 to 25 oz/in2*	0 to 2,000 kPa*	0 to 60 in H_2O	0 to 100 Bar	0 to 1,600 Bar
0 to 25 PSI*	0 to 400 PSI	0 to 10,000 PSI	0 to 30 oz/in2*	0 to 5,000 kPa	0 to 100 in H_2O	0 to 160 Bar	0 to 2,000 Bar
0 to 30 PSI*	0 to 500 PSI	0 to 15,000 PSI	0 to 50 oz/in2*			0 to 200 Bar	
0 to 35 PSI*	0 to 600 PSI	0 to 20,000 PSI					
0 to 45 PSI*	0 to 750 PSI	0 to 25,000 PSI					
0 to 50 PSI*	0 to 800 PSI	0 to 30,000 PSI					
0 to 60 PSI*	0 to 1,000 PSI	3/15 PSI					

Note: Beige boxes denote Static Pressure Ranges available for additional pens on a DP Recorder.

* Pressure Ranges available for Test & Valve Recorders.

We build to order: if your process requires an option not shown here please call Customer Service.

Process Connections

- 1/4" FNPT, Standard
- 1/2" FNPT, Optional
- 9/16"-18 UNF High Pressure Female Autoclave style fitting required on PSI ranges 15,000 and above, optional for 10,000 PSI.

Standard Pressure Connection: 1/4" FNPT Female pressure connections for ranges up to 10,000 PSI.

Autoclave Pressure Connection: 9/16"-18 UNF High Pressure Female Autoclave style fitting - optional for 10,000 PSI, required for ranges 15,000 and above. (Also requires user supplied tubing assembly).

Specifications subject to change without notice. Go to www.palmerwahl.com for most current information.

Recorder Charts and Pens

Palmer Recorders use superior quality chart paper and pens engineered to work together for optimum performance and accuracy.

Recorder Charts

Palmer Recorder Charts: Our superior quality charts meet or exceed OEM standards for accuracy and performance. Charts are manufactured to provide stiffness and curl control for use in the field for normal and high stress conditions. A wide assortment of single, dual and triple range charts are available in both 8" and 12" diameters, in a large selection of rotation speeds. Charts are packaged 100 per box.

Standard Palmer Recorder charts have an Arc Line of 6-3/8". The top pen follows the arc line. We can supply any maker chart you need, as well as order custom range charts.

Recorder Pens

Palmer Recorder Pens: Our Recorder pens are engineered to produce superior image quality in the most demanding conditions. Our pen assembly transmits the movement of the sensors into a smooth, gliding arc across the chart. This prevents burrowing, resulting in longer pen life and better accuracy and readability.

Palmer Recorder Pens come in different NIB Heights and are installed on separate Pen Arms which have different lengths and heights. This enables the pens to overlap and operate independently of each other. On a standard Recorder the Top Pen follows the Arc Line of 6-3/8".

Replaceable fine point, felt tip pens are available in packages of 5 in Red, Blue, Green, and Black. Be sure to order the correct pen for the desired position. Standard color pens, shown here, are recommended. Other colors and configurations are available as special order.

Recorder Pen Order Information

Pen Arm #	Pen Position	Color	Part Number	1 Pen Recorder	2 Pen Recorder	3 Pen Recorder
RP-3	TOP PEN on 3 Pen Recorder	Red	AR-3714-11-6	✓	✓	Std
		Blue	AR-3714-14-6	✓	✓	✓
		Green	AR-3714-13-6	✓	✓	✓
		Black	AR-3714-12-6	✓	✓	✓
RP-2	ONLY PEN on 1 Pen Recorder TOP PEN on 2 Pen Recorder MIDDLE PEN on 3 Pen Recorder	Red	AR-3714-06-6	Std	Std	✓
		Blue	AR-3714-09-6	✓	✓	Std
		Green	AR-3714-08-6	✓	✓	✓
		Black	AR-3714-07-6	✓	✓	✓
RP-1	BOTTOM PEN on 2 or 3 Pen Recorder	Red	AR-3714-01-6	✓	✓	✓
		Blue	AR-3714-04-6	✓	Std	✓
		Green	AR-3714-03-6	✓	✓	Std
		Black	AR-3714-02-6	✓	✓	✓

1 Pen Recorder:
ONLY PEN
Order: #RP-2, Red - #AR-3714-06-6 (Standard)

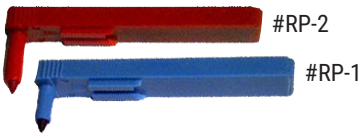

2 Pen Recorder:
TOP PEN, Order: #RP-2, Red - #AR-3714-06-6 (Standard)
BOTTOM PEN, Order: #RP-1, Blue - #AR-3714-04-6 (Standard)

NIB Heights:
#RP-3 = 0.813"
#RP-2 = 0.533"
#RP-1 = 0.253"

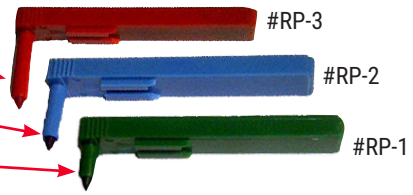

3 Pen Recorder:
TOP PEN, Order: #RP-3, Red - #AR-3714-11-6 (Standard)
MIDDLE PEN, Order: #RP-2, Blue - #AR-3714-09-6 (Standard)
BOTTOM PEN, Order: #RP-1, Green - #AR-3714-03-6 (Standard)

Aluminum Case Dimensional Drawings

Wall Mounted

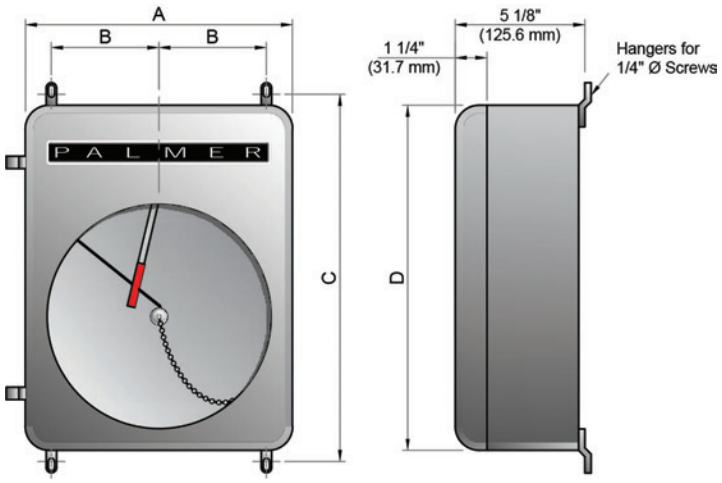

Portable

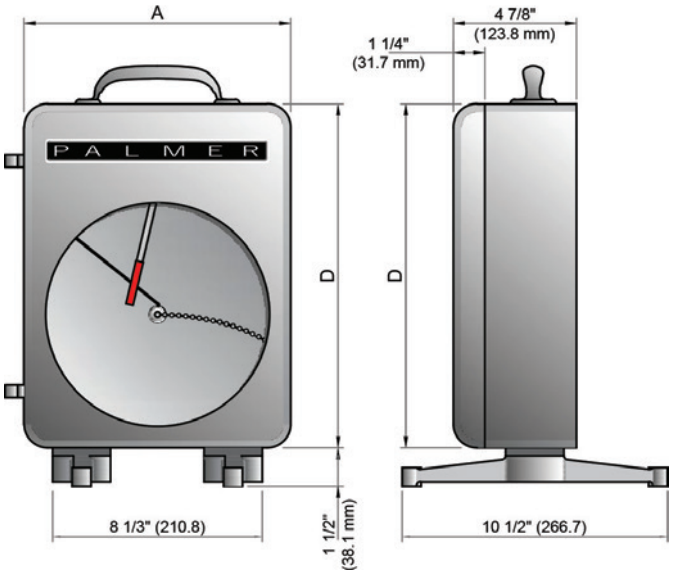

Flush Mounted

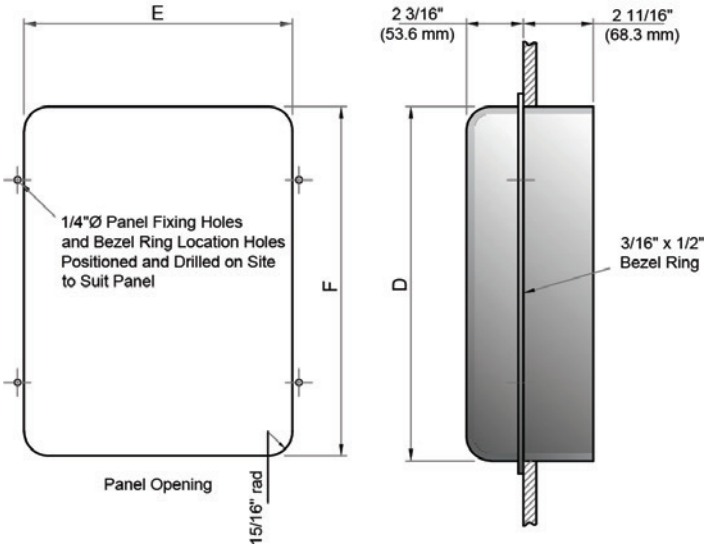

Pipestand Mounted

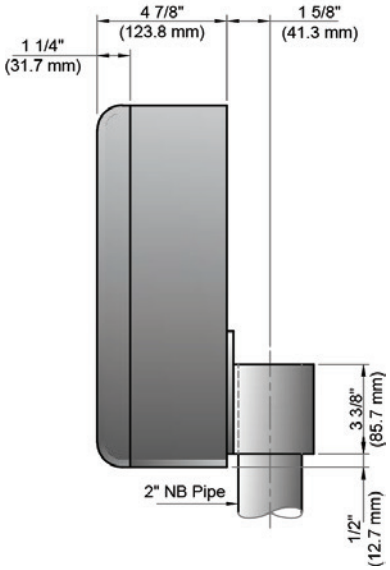

Pedestal Mounted

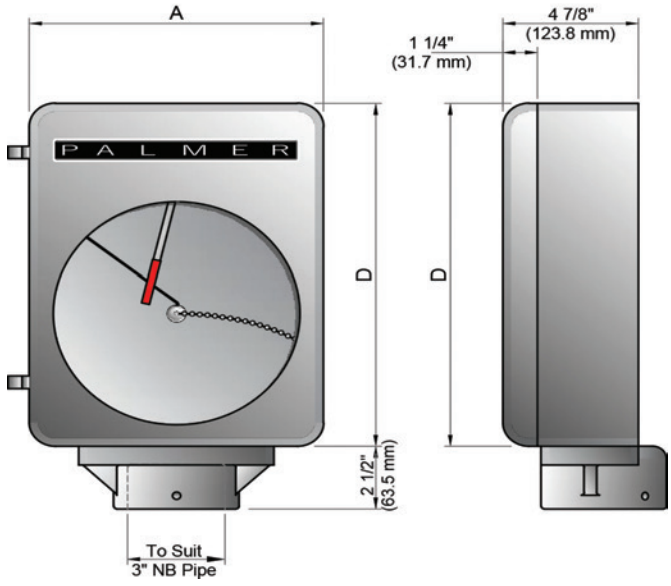

Aluminum Case Recorder Dimensions				
Dimensions	**8 inch Case**		**12 inch Case**	
A	10-9/16 in	268.3 mm	13-1/16 in	331.8 mm
B	4-1/4 in	107.9 mm	4-1/2 in	114.3 mm
C	14-1/2 in	361.9 mm	16-3/8 in	415.9 mm
D	13-5/8 in	346.0 mm	15-13/16 in	401.6 mm
E	10-5/16 in	261.9 mm	12-13/16 in	325.4 mm
F	13-7/16 in	341.3 mm	15-9/16 in	395.3 mm
Weights	**8 inch Case**		**12 inch Case**	
Empty Box	approx 12 lbs (5.44 kg)		approx 16 lbs (7.25 kg)	
Weight depends on Case style and # of systems				

CIRCULAR CHART RECORDERS - ALL TYPES	
Step 1 - Select: Chart Recorder Type	
Code	**Chart Recorder Type**
1	Pressure System
2	Temperature System
3	Pressure & Temperature System
4	Valve System* - On/Off Valve, Standard (Valve & Test System with On/Off Valve and Pete's Plug, contact Customer Service for quote)

Step 2 - Select: Chart Recorder Size	
Code	**Chart Recorder Size**
2	12 inch Aluminum
8	8 inch Aluminum
P	8 inch Pelican Case (Wall, Portable or Pipestand only. Number of pens/systems available for each Recorder Mounting Type may be limited.)
R	12 inch Pelican Case (Wall, Portable or Pipestand only. Number of pens/systems available for each Recorder Mounting Type may be limited.)

Step 3 - Select: Chart Recorder Mounting Style	
Code	**Chart Recorder Mounting Style**
2	Wall Mount - Pull Latch with Hasp - Standard
3	Flush Mount - includes Black Lever Style Handle. Not Available in Pelican Case
4	Pipestand Mount - Pull Latch with Hasp - Standard
5	Portable - Pull Latch with Hasp - Standard
8	Pedestal Mount - 3 inch Slip-On Connection, Pull Latch with Hasp - Standard. Pressure Systems only. Not Available in Pelican Case.

* Not available in 12" Pelican Case

Recorder Type	Recorder Size	Recorder Mounting Style
Insert Codes in boxes above to build part number		

Important Note: This order guide shows the main choices to be made when ordering a Recorder. There are additional items to be specified. Please visit palmerwahl.com/Recorders and click on the type of recorder you are interested in to access the Recorder Order Guide which can be found on each product page. If you prefer, please call our Customer Service Department for help from a representative.

We build to order: if your process requires an option not shown here please call Customer Service.

MADE IN THE USA

MNC Manufactured in North Carolina

ISO 9001:2015 CERTIFIED QUALITY MANAGEMENT SYSTEM

THREE YEAR 3 WARRANTY

CALIBRATION TRACEABLE TO NIST

IP55 COMPLIANT

Digital version of data sheet may differ from printed version. Go to www.palmerwahl.com for most current information.

Specifications subject to change without notice. Go to www.palmerwahl.com for most current information.